Level shifters

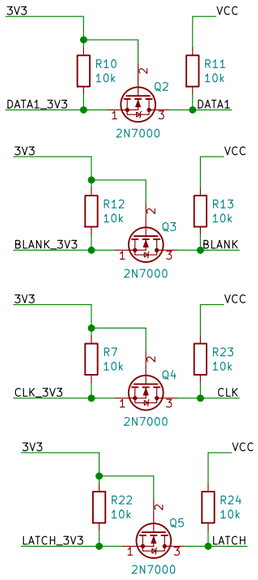

Display drivers

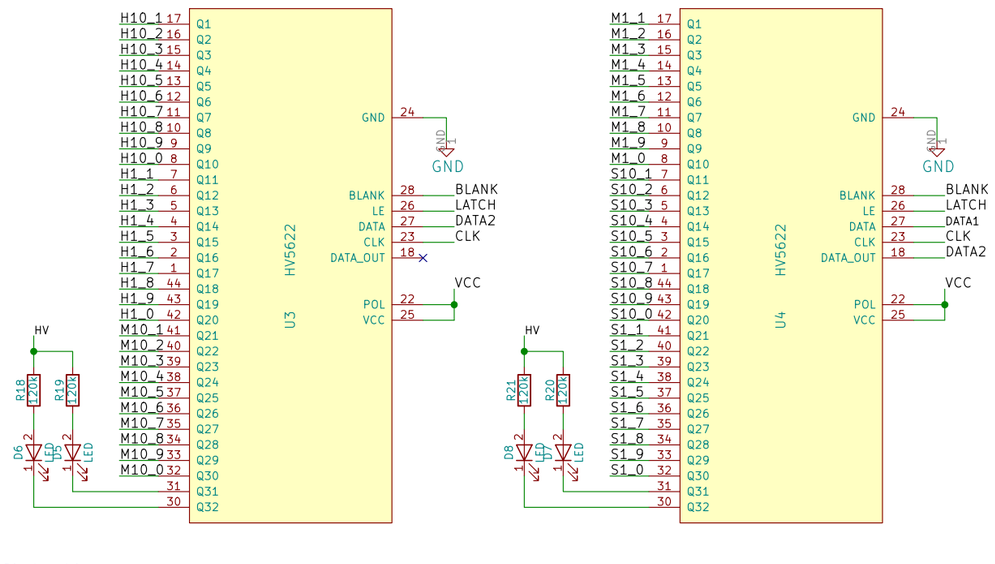

Barrel Jack Input

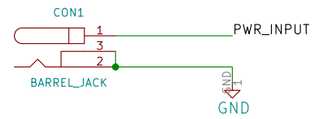

I2C interface (3V3)

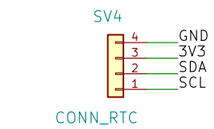

Front panel

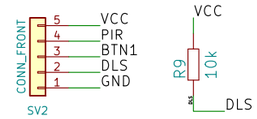

NeoPixel Test Point

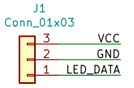

Tubes

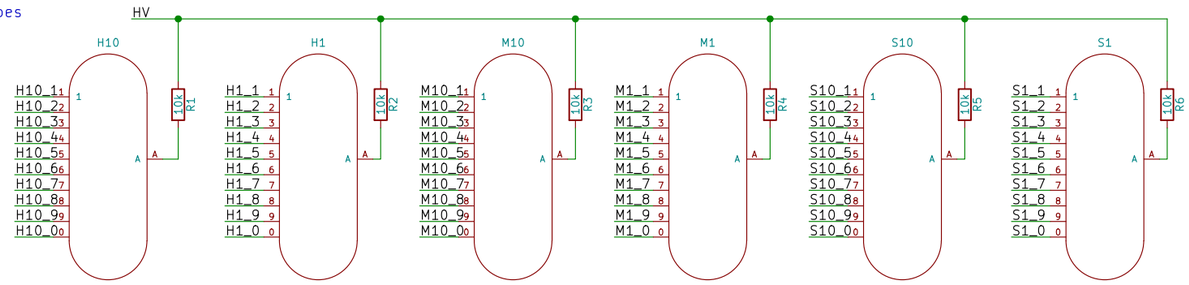

RTC (option)

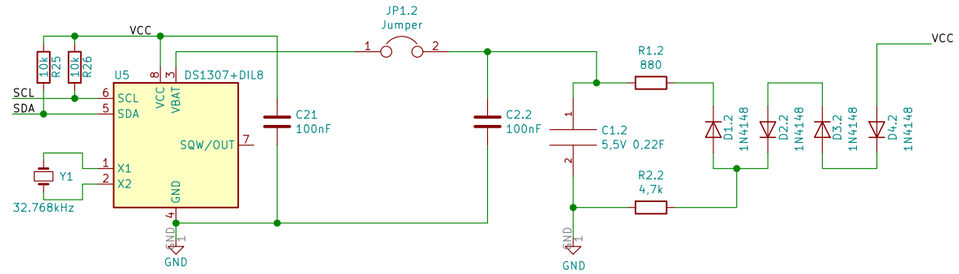

NeoPixel back lights

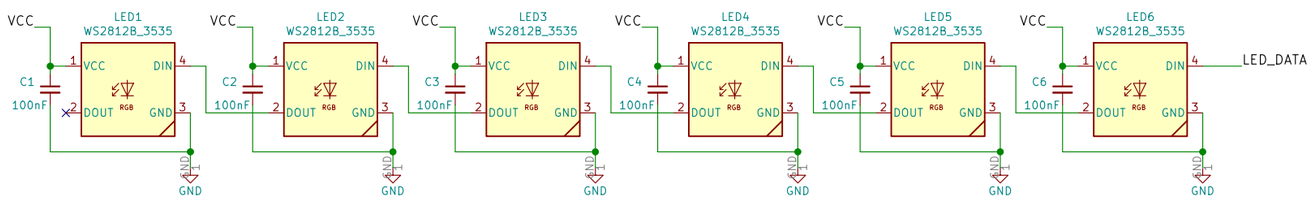

Controller

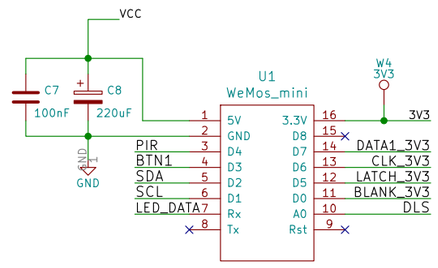

Power regulator

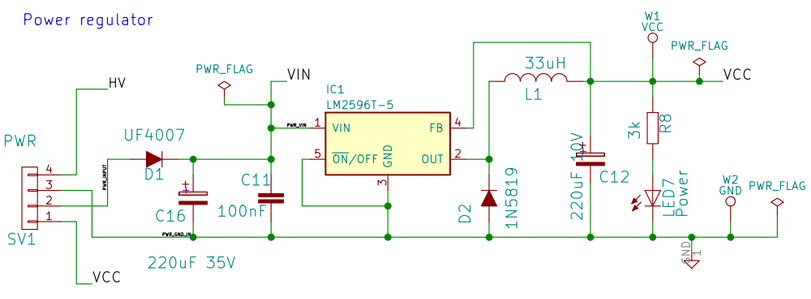

High Voltage Generator

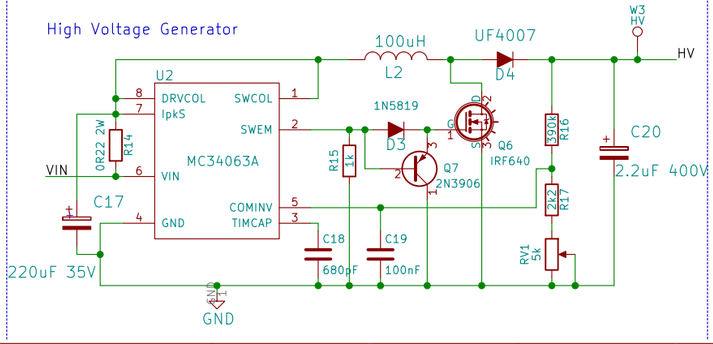

Ian's Nixie Clocks/ AE

Sheet: /
File: PrismDDZ566M SuperCap.sch

Title: Direct Drive Arduino Nixie Clock Z566M WS2812_3535

Size: A3	Date: 2017-11-08	**Rev: 000**
KiCad E.D.A. kicad (5.1.2)-1		Id: 1/1